1 phase Transformer Softstart relais for soft start of 3 Phase switch mode Power supply

TSRL Application for soft start of a large capazitive Load after a 3 phase rectifier

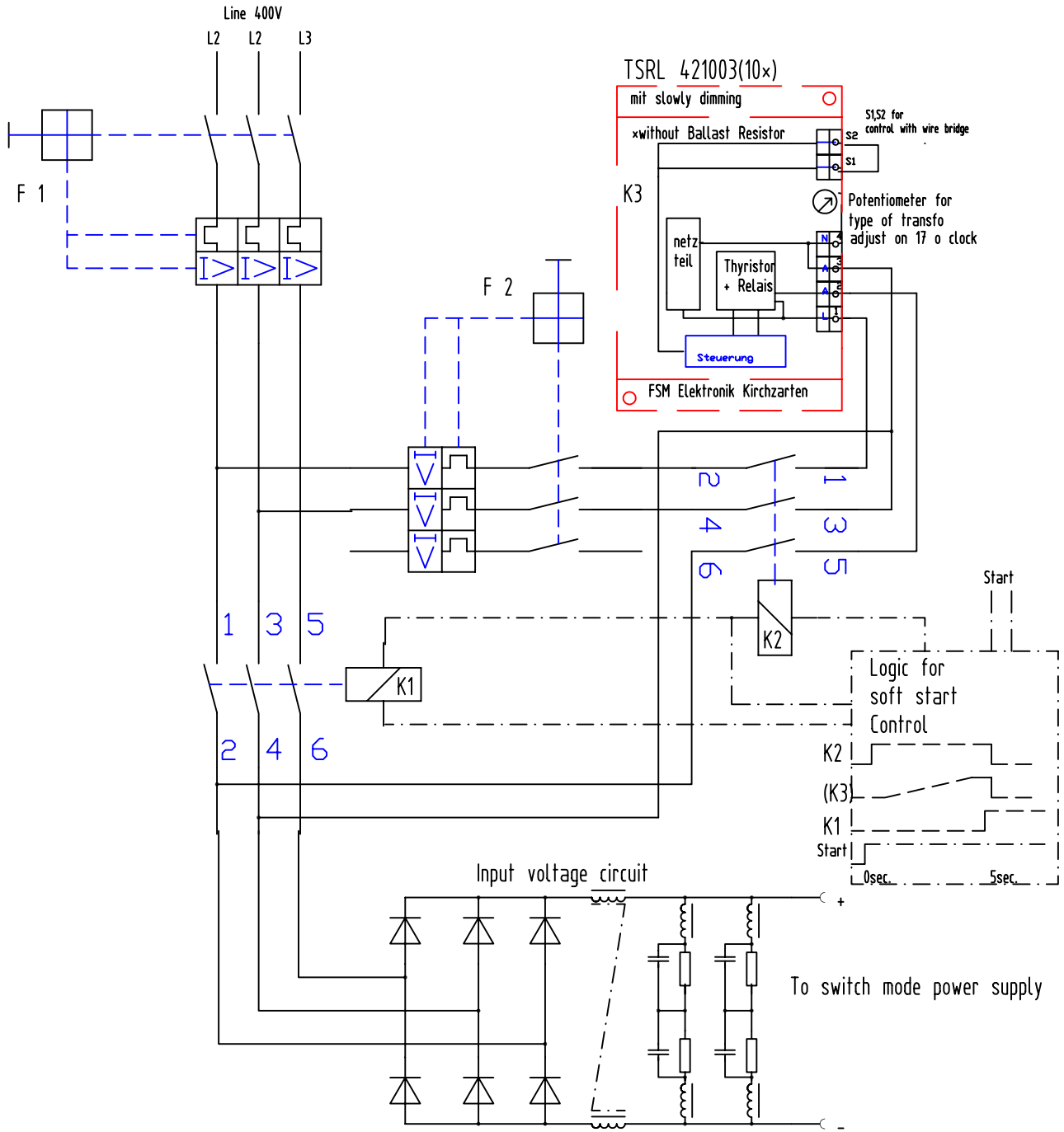

TSRL for capazitive Loads -400V 3Ph-e.dwg, drawed 20.10.07 v. EMeko Ing. Büro Freiburg